9GE0412P3J03 With pulse sensor with PWM control

PWM duty cycle

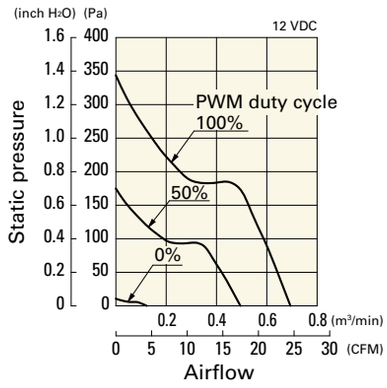

Operating voltage range

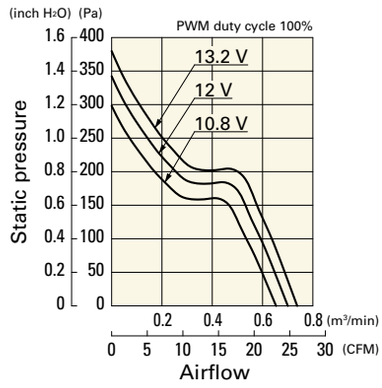

PWM duty - Speed characteristics example

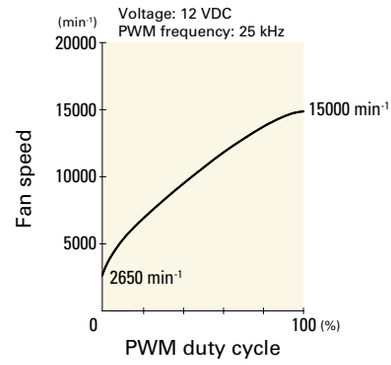

9GE0412P3G03 With pulse sensor with PWM control

PWM duty cycle

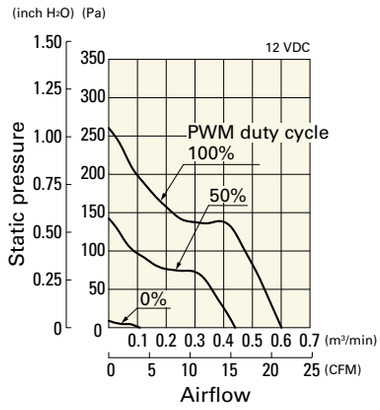

Operating voltage range

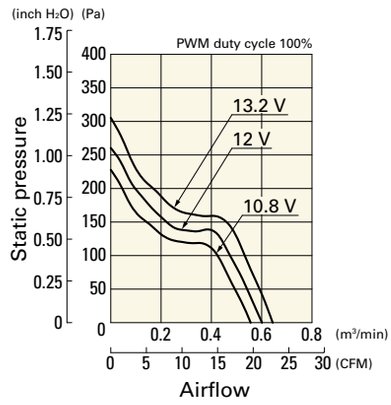

PWM duty - Speed characteristics example

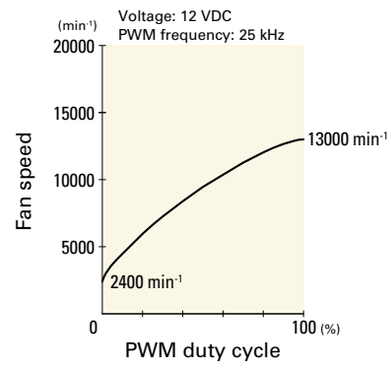

Dimensions (unit: mm)

Screw-mount the fan through both flanges.

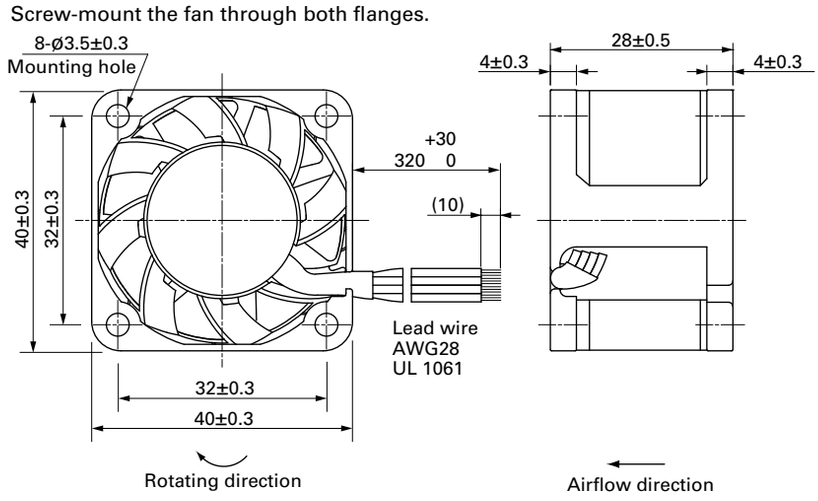

Beijing Hengrui Mechanical and Electrical Equipment Co,Ltd
+86 10-62547612 zhangyu@bjhengrui.cn en.bjhengrui.com

Inlet side, Outlet side

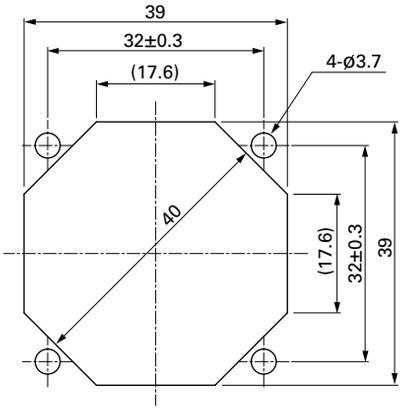

Options

Finger guards page: p. 598

Model no.: 109-059, 109-059H

Beijing Hengrui Mechanical and Electrical Equipment Co,Ltd
+86 10-62547612 zhangyu@bjhengrui.cn en.bjhengrui.com

40×40×28 mm

San Ace 40 9P type

General Specifications

- Material ..... Frame: Plastic (Flammability: UL 94V-0), Impeller: Plastic (Flammability: UL 94V-1)
- Expected life ..... See the table below. (L10 life: 90% survival rate for continuous operation in free air at 60˚C, rated voltage) Expected life at 40°C is for reference only.
- Motor protection function ..... Locked rotor burnout protection, Reverse polarity protection For details, please refer to p. 616.
- Dielectric strength ..... 50/60 Hz, 500 VAC, for 1 minute (between lead wire conductors and frame)
- Insulation resistance ..... 10 MΩ min. at 500 VDC (between lead wire conductors and frame)
- Sound pressure level (SPL) ..... A-weighted sound pressure level (SPL) at 1 m away from the air inlet.
- Storage temperature ..... -30 to +70˚C (Non-condensing)
- Lead wire ..... ⊕Red ⊖Black or Blue (Sensor) Yellow
- Mass ..... 52 g

Specifications

The models listed below **have ribs and a pulse sensor.**

Model no.	Rated voltage [V]	Operating voltage range [V]	Rated current [A]	Rated input [W]	Rated speed [min⁻¹]	Max. airflow [m³/min]	Max. airflow [CFM]	Max. static pressure [Pa]	Max. static pressure [inchH₂O]	SPL [dB (A)]	Operating temperature [˚C]	Expected life [h]
109P0405H3013	5	4.5 to 5.5	0.68	3.4	8700	0.32	11.3	102.9	0.414	37	-20 to +70	40000/60˚C (70000/40˚C)
109P0405F3013			0.28	1.4	6700	0.244	8.6	58.8	0.236	30		60000/60˚C (90000/40˚C)
109P0412G3013	12	7 to 13.2	0.31	3.72	11500	0.42	14.8	179	0.719	42	-20 to +60	40000/60˚C (70000/40˚C)
109P0412B3013		7 to 13.8	0.28	3.36	10300	0.38	13.4	143	0.574	40		
109P0412H3013			0.195	2.34	8700	0.32	11.3	102.9	0.414	37	-20 to +70	60000/60˚C (90000/40˚C)
109P0412F3013			0.105	1.26	6700	0.244	8.6	58.8	0.236	30		
109P0412M3013		10.2 to 13.8	0.045	0.54	4100	0.15	5.3	21.6	0.087	20		
109P0424G3013	24	12 to 26.4	0.19	4.56	11500	0.42	14.8	179	0.719	42	-20 to +60	40000/60˚C (70000/40˚C)
109P0424B3013			0.13	3.12	10300	0.38	13.4	143	0.574	40		
109P0424H3013		12 to 27.6	0.095	2.28	8700	0.32	11.3	102.9	0.414	37	-20 to +70	60000/60˚C (90000/40˚C)
109P0424F3013		14 to 27.6	0.055	1.32	6700	0.244	8.6	58.8	0.236	30		

Note: Sensor and control options are available for selection. Refer to the table on p. 645.

Airflow - Static Pressure Characteristics

109P0405H3013 With pulse sensor

Operating voltage range

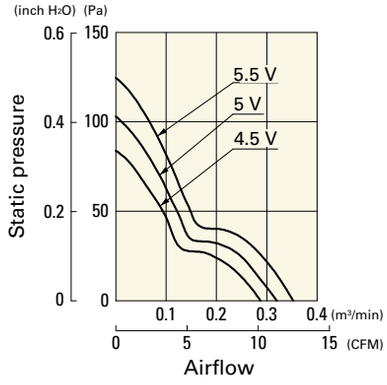

109P0405F3013 With pulse sensor

Operating voltage range

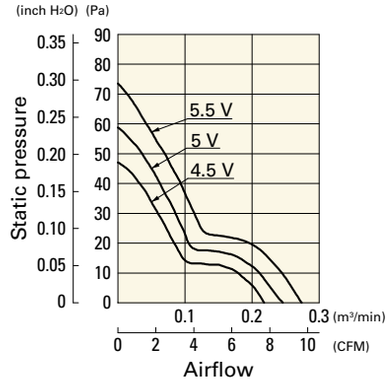

109P0412G3013 With pulse sensor

Operating voltage range

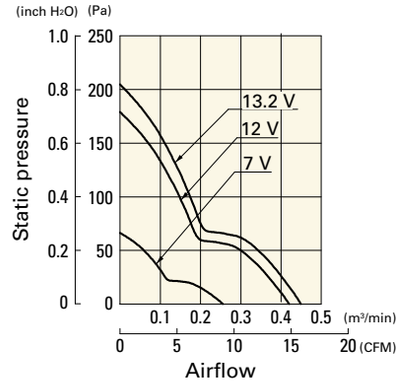

Beijing Hengrui Mechanical and Electrical Equipment Co,Ltd
+86 10-62547612 zhangyu@bjhengrui.cn en.bjhengrui.com

109P0412B3013 With pulse sensor

Operating voltage range

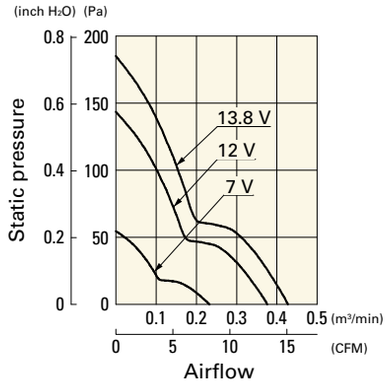

109P0412H3013 With pulse sensor

Operating voltage range

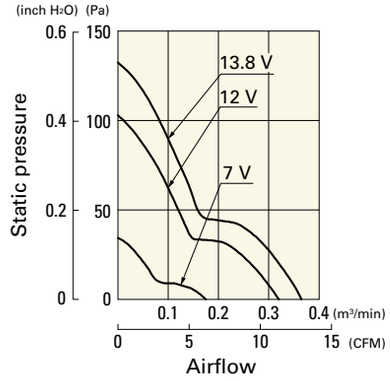

109P0412F3013 With pulse sensor

Operating voltage range

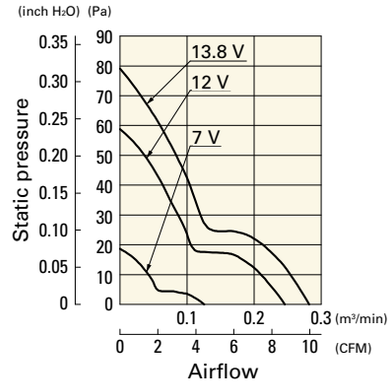

109P0412M3013 With pulse sensor

Operating voltage range

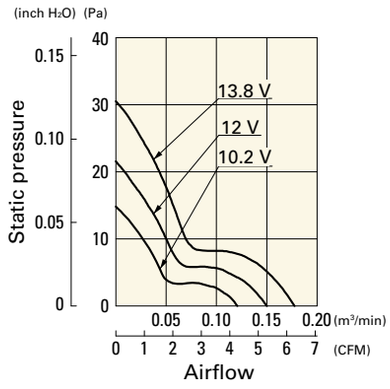

109P0424G3013 With pulse sensor

Operating voltage range

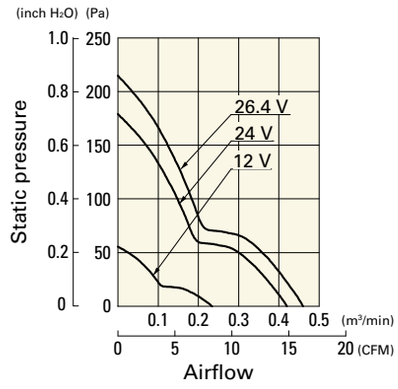

109P0424B3013 With pulse sensor

Operating voltage range

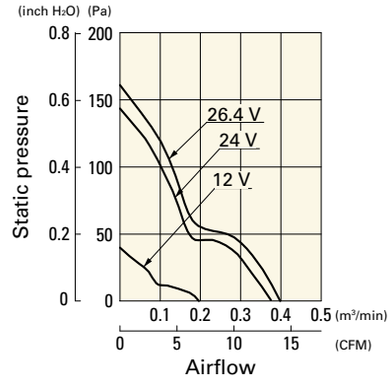

109P0424H3013 With pulse sensor

Operating voltage range

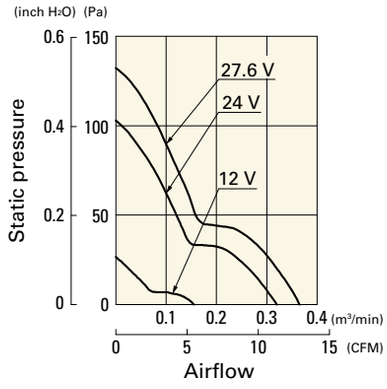

109P0424F3013 With pulse sensor

Operating voltage range

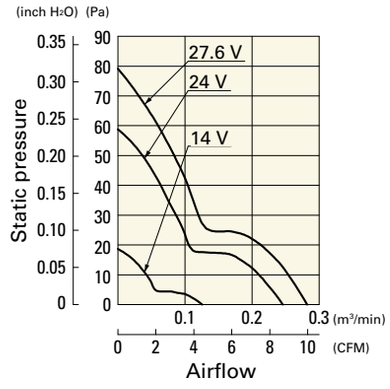

Dimensions (unit: mm)

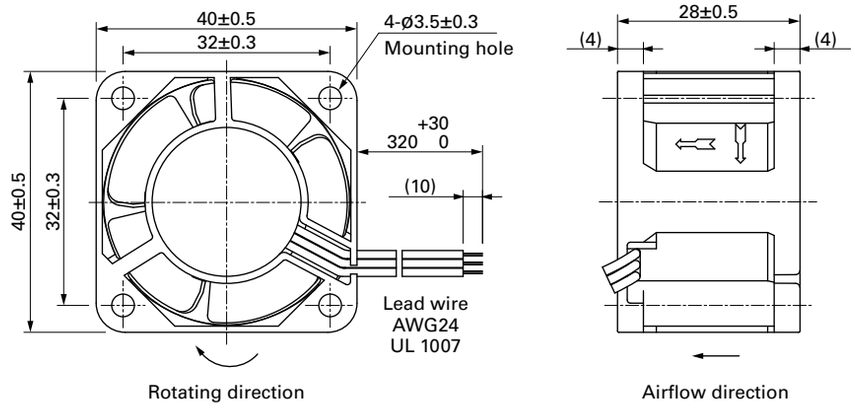

Beijing Hengrui Mechanical and Electrical Equipment Co,Ltd
+86 10-62547612 zhangyu@bjhengrui.cn en.bjhengrui.com

Inlet side, Outlet side

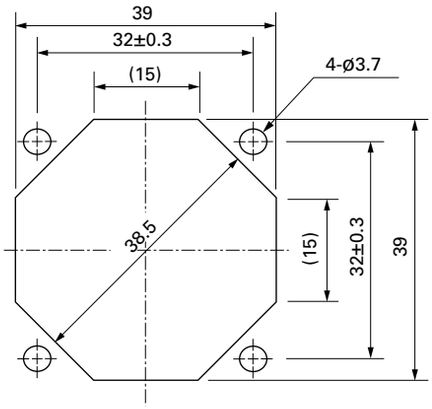

Options

Finger guards page: p. 598

Model no.: 109-059, 109-059H

Beijing Hengrui Mechanical and Electrical Equipment Co,Ltd
+86 10-62547612 zhangyu@bjhengrui.cn en.bjhengrui.com